ASSEMBLY INSTRUCTION

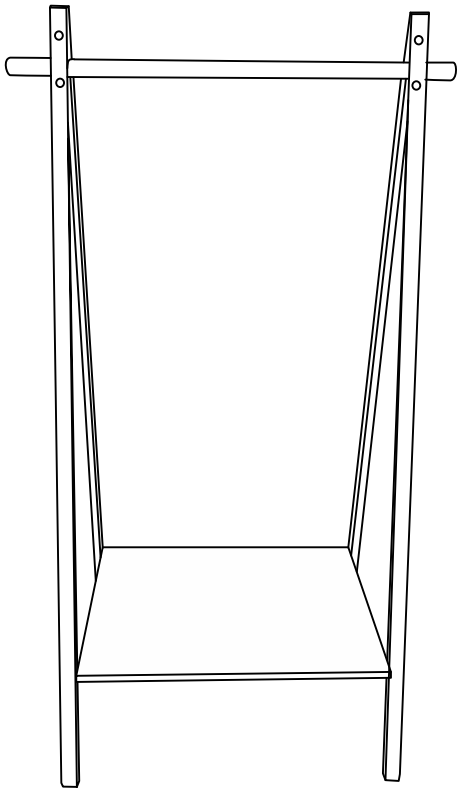

① x3

② x1

③ x1

④ x1

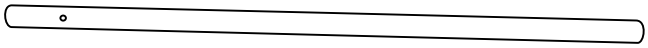

Ⓐ x2

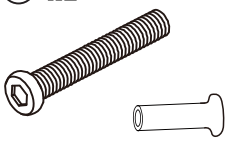

Ⓑ x2

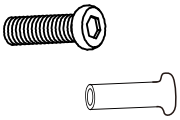

Ⓒ x4

Ⓓ x1

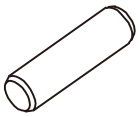

Ⓔ x1

1

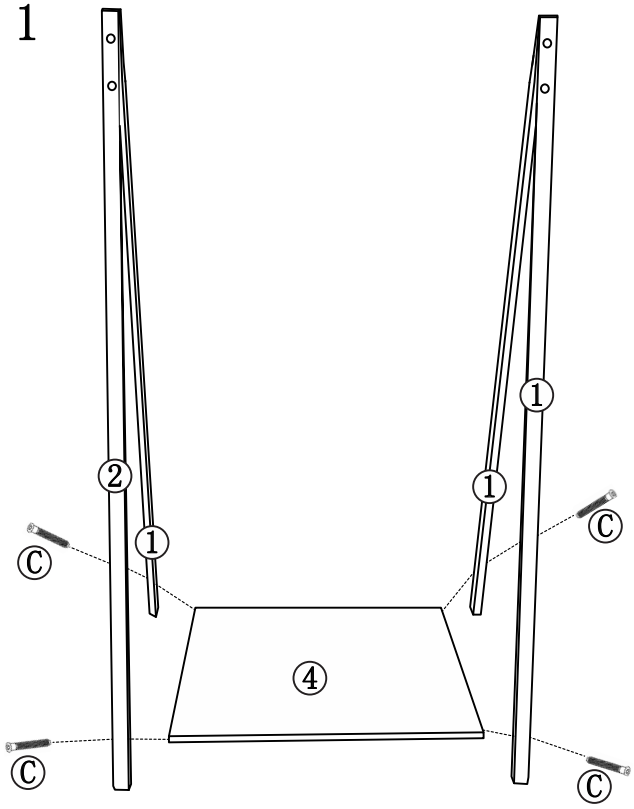
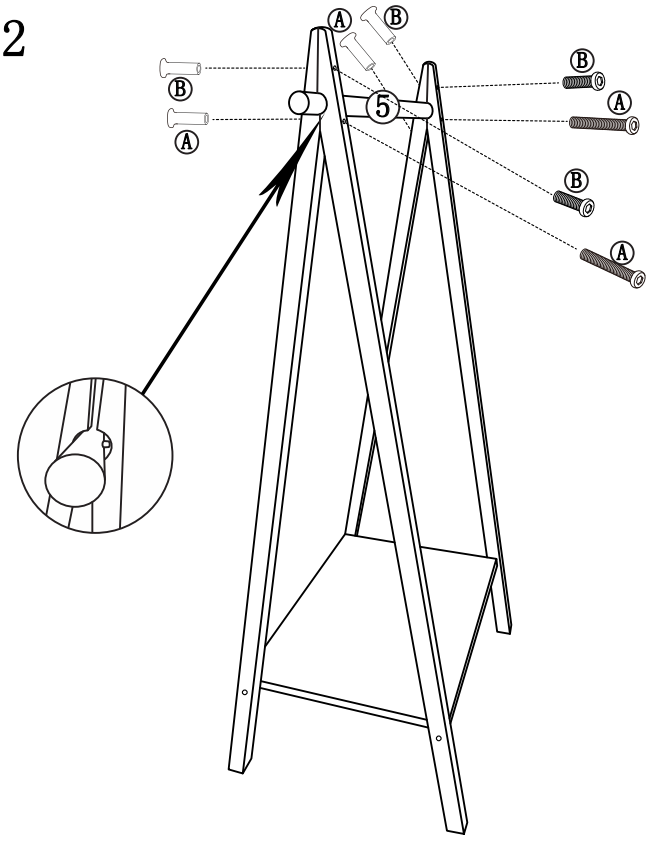
2