ASSEMBLY INSTRUCTION

PINCH Dining table
IDPI-16090 / IDPI-18090 / IDPI-200100
IDPI-220100 / IDPI-240100

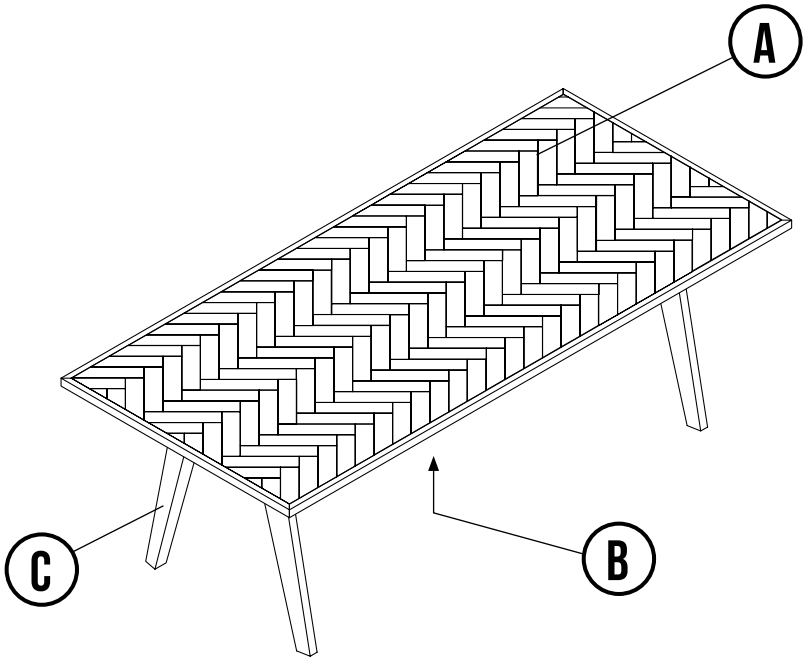

160x90 cm x H:74
180x90 cm x H:74
200x100 cm x H:74
220x100 cm x H:74
240x100 cm x H:74

01.06.2021

ILVA

Kære Kunde

Tillykke med dit nye køb.
Følg disse råd og få det bedste resultat, når du samler produktet.

Læs vejledningen grundigt, før du går i gang.
Find hjælp, hvis I skal være to til at samle møblet.
Tjek at pakken indeholder alle dele på materialeoversigten.
Saml møblet på et blødt underlag, så du undgår ridser.
Følg vejledningen nøje.
Efterspænd møblet efter en måned.
Gem denne vejledning.

Afsæt god tid.

Nogle møbler kan samles på få minutter. Andre – der f.eks. består af flere dele – kan tage over en time at samle. Afsæt god tid eller gør evt. arbejdet af flere omgange.

Mangler du enkeltdele, eller har du spørgsmål til Samlevejledningen kontakt kundeservice på ilva.dk.

Venlig hilsen

ILVA

Anbefalet

Dear Customer

Congratulations on your new purchase.
Follow this advice and get the best Result when assembling the product.

Read the instruction carefully before you start.
Get help, if two persons are required for assembly.
Make sure, you have all parts on the total material list.
Work on a soft, flat surface to avoid any damage to the finish.
Follow the assembly instruction.
Tighten the furniture joints after a Month.
Keep the assembly instruction.

Allocate good time.

Some furniture can be assembled in minutes. Others – e.g. products in several parts – can take more than an hour to finish. Make sure to allocate good time or divide up the work.

If any parts are missing or you have questions for the Assembly instruction contact support at ilva.dk.

Best regards

ILVA

Recommended

Tools needed

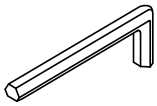

Don’t´use!!!

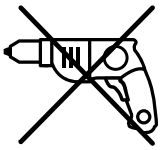

TOTAL MATERIAL LIST, HARDWARE

M6x60/x8	**Ø10x46**/x8	**Ø15x19**/x8	**Ø10x12**/x8	**Allen key**/x1
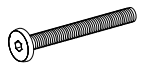	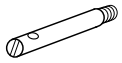			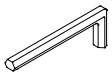

ILVA

TOTAL MATERIAL LIST, FURNITURE PARTS

Tabletop/x1	**Legs**/x2	**Plint**/x2
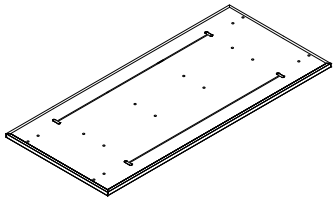	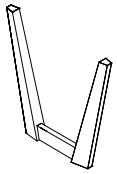	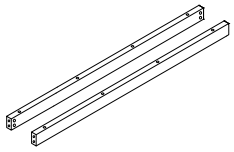

ILVA

MATERIAL LIST

A B C

M6x60/x8	**Ø10x46**/x8	**Ø15x19**/x8	**Ø10x12**/x8	**Allen key**/x1	**Tabletop**/x1
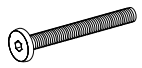	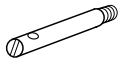			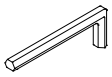	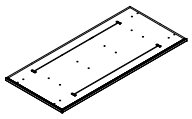
Legs/x2	**Plint**/x2				
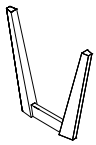	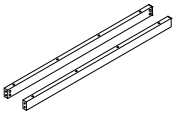				

ILVA

ASSEMBLY INSTRUCTION 1

A B

M6x60/x8

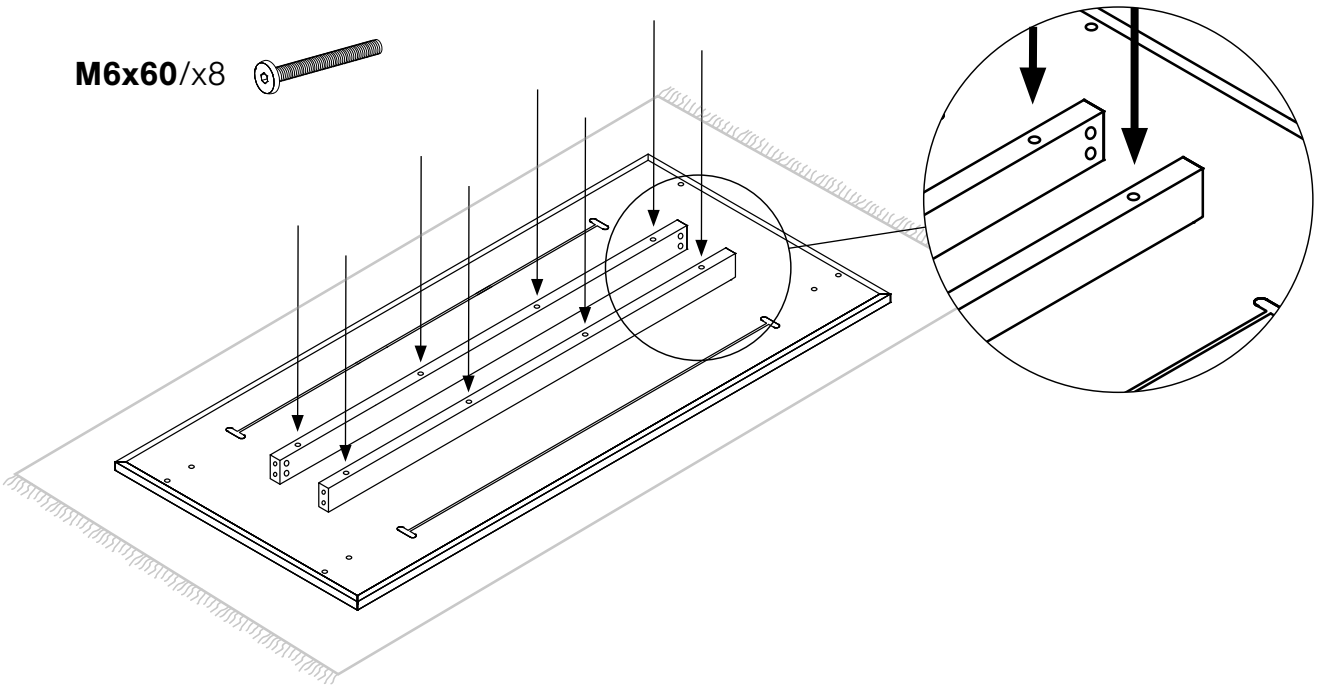

ASSEMBLY INSTRUCTION 2

A B

M15x19/x8

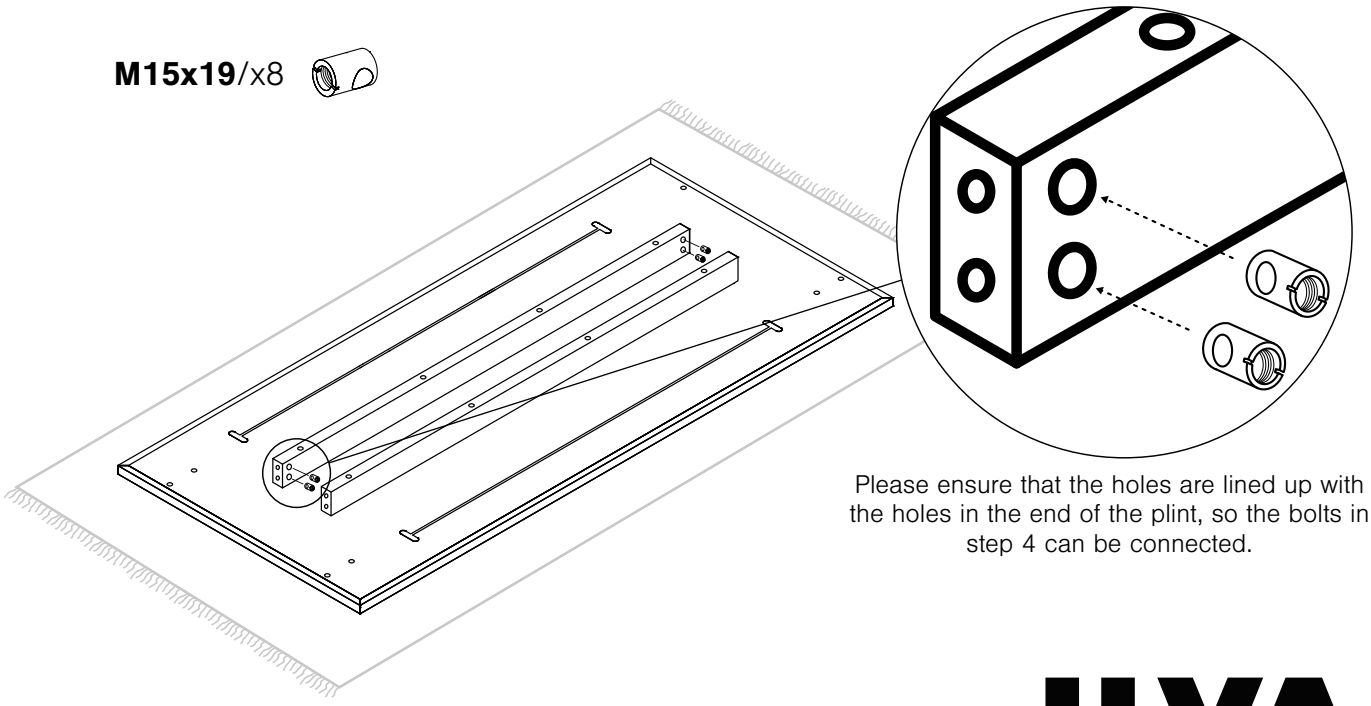

Please ensure that the holes are lined up with the holes in the end of the plint, so the bolts in step 4 can be connected.

ILVA

ASSEMBLY INSTRUCTION 3

C

Ø10x46/x8

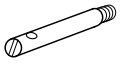

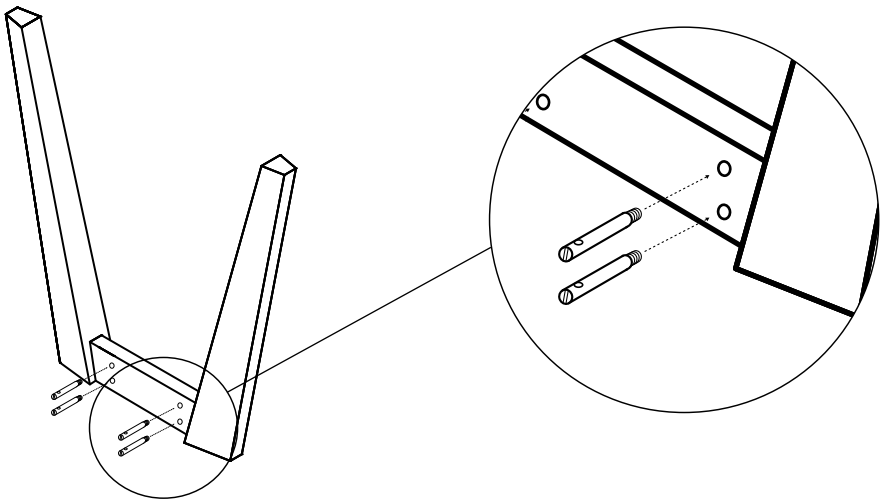

Mount the Ø10x46 screws in both legs.

ASSEMBLY INSTRUCTION 4

A B C

Ø10x12/x8

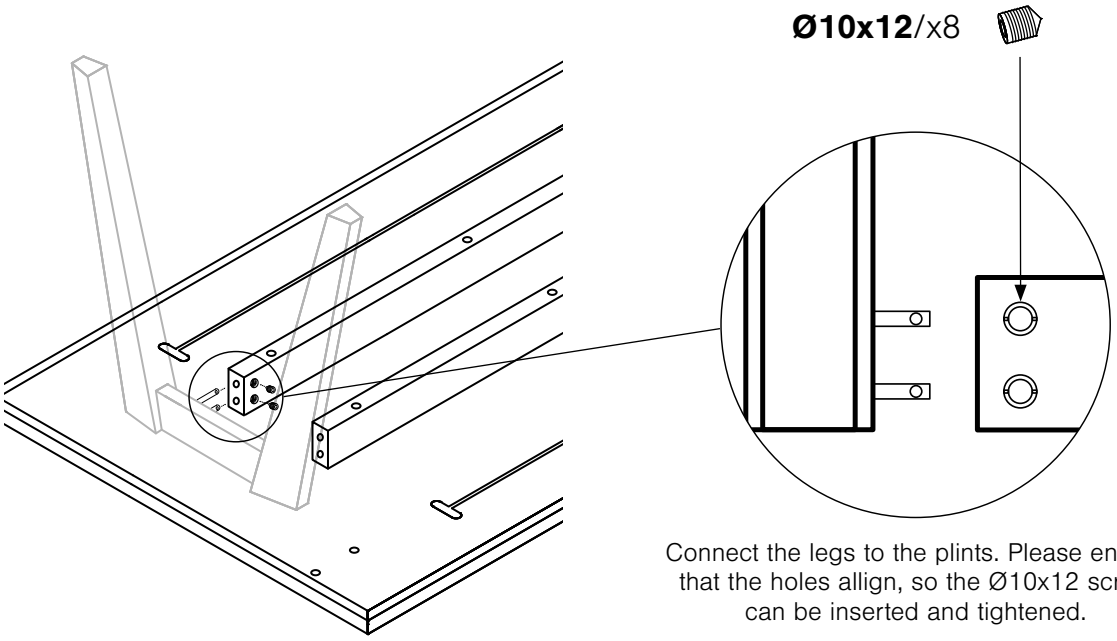

Connect the legs to the plints. Please ensure that the holes allign, so the Ø10x12 screw can be inserted and tightened.

ILVA

ASSEMBLY INSTRUCTION 5 (OPTIONAL)

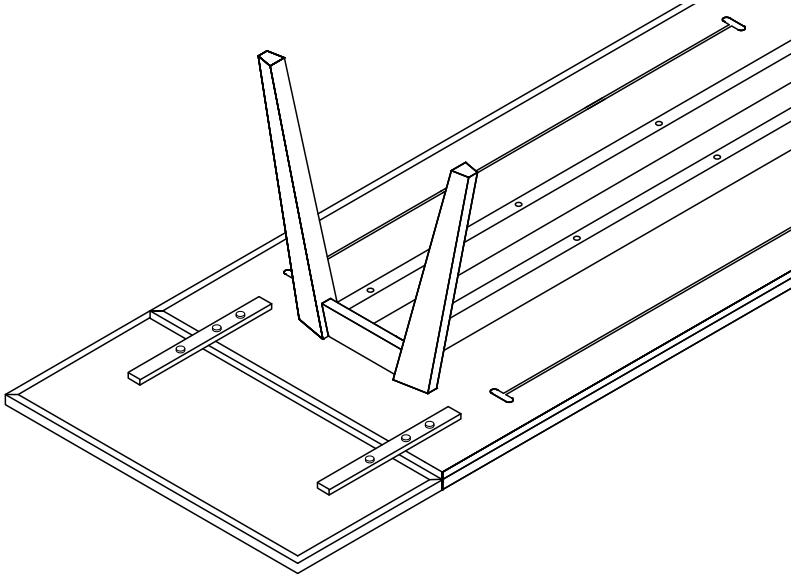

If you have ordered end leaves for your table, this can be installed by mounting the 2 rails to the table with thumb screws.

After that the leaves can be placed on top of the rails and mounted with the thumb screws.

NB:
The table is here shown upside/down to illustrate the mounting – the leaves are to be mounted while the table is standing on the legs.

TIP:
Do not tighten the thumb screws until all is mounted. Then adjust the leaf to fit perfectly and then tighten the thumb screws.

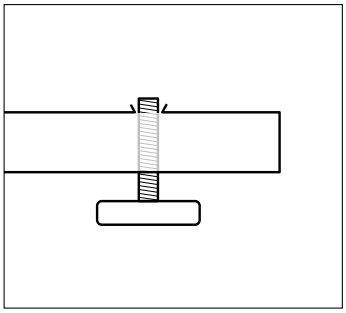

IMPORTANT!
–

Only use the thumbscrews together with the rail mounts and do not “store” the thumbscrews in the tabletop or leaf, when not in use.

The thumbscrews are longer than the tabletop/ leaf is thick, and can potientially break the surface of it if the thumbscrew is tightened with too much force.

ILVA

MAX LOAD

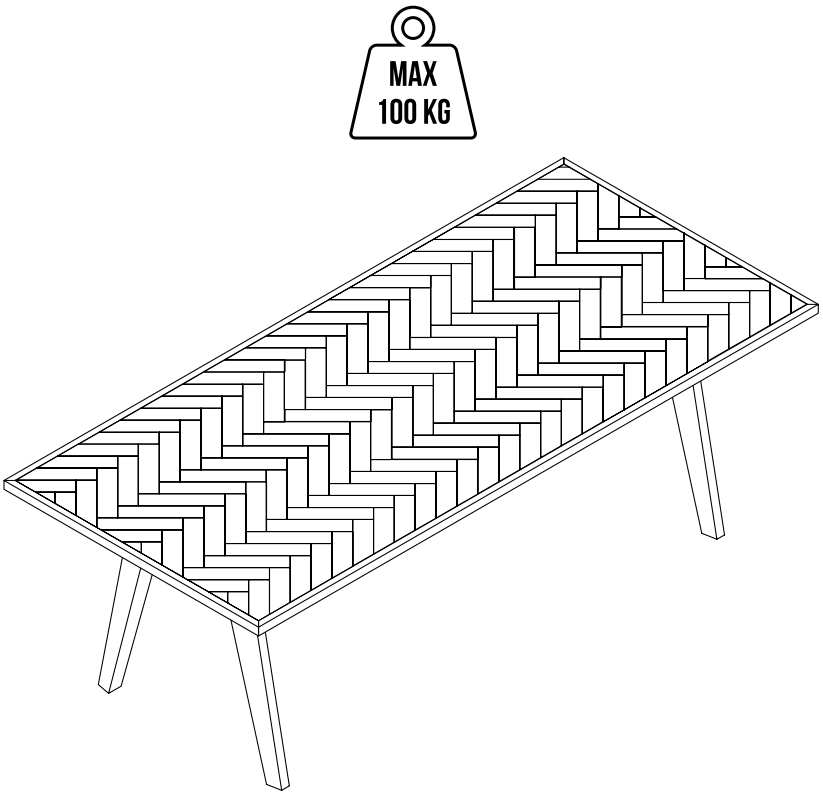

Evenly distribute the weight
on the table!

ILVA